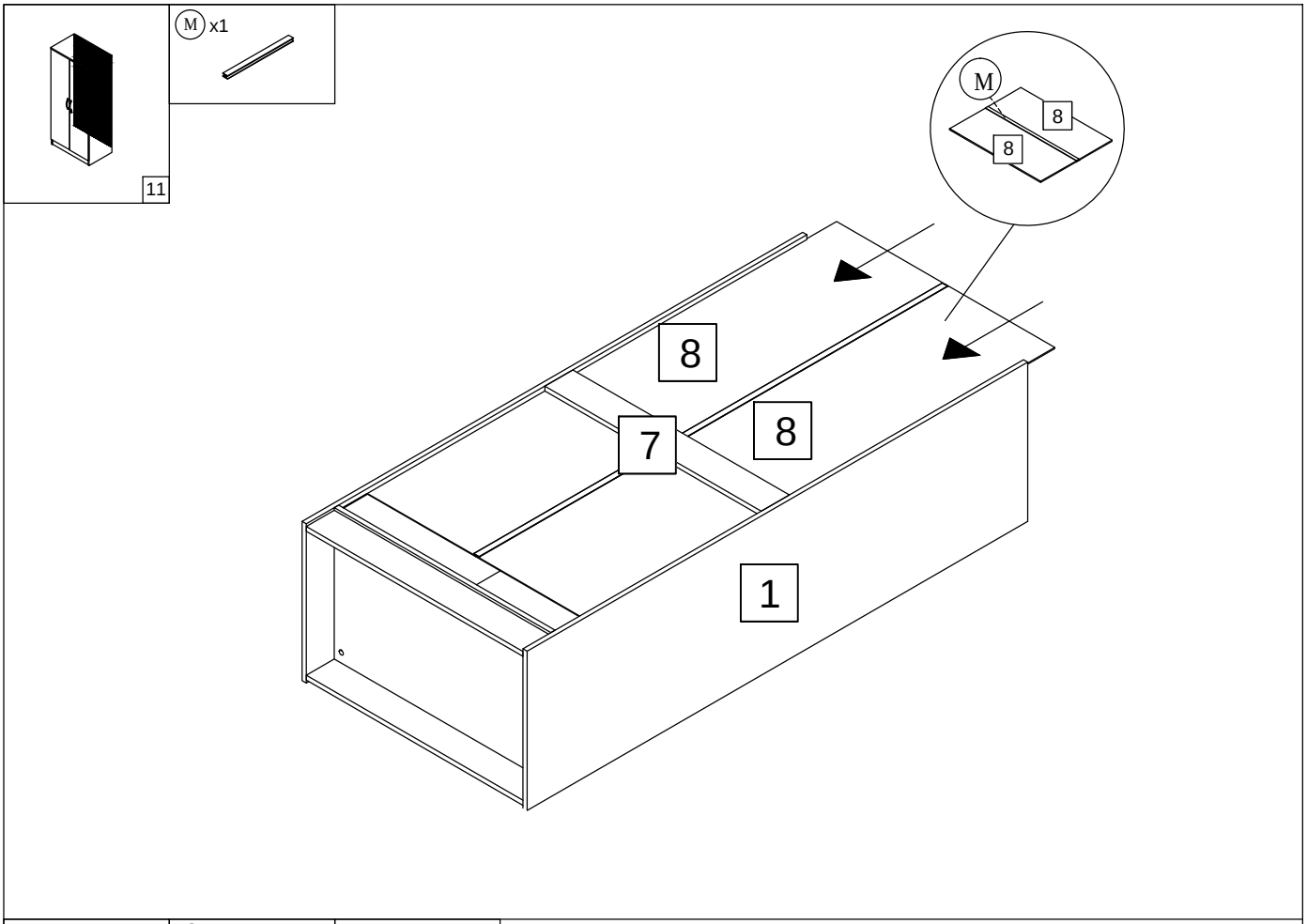
11
M x1
M
8
8
8
7
8
1

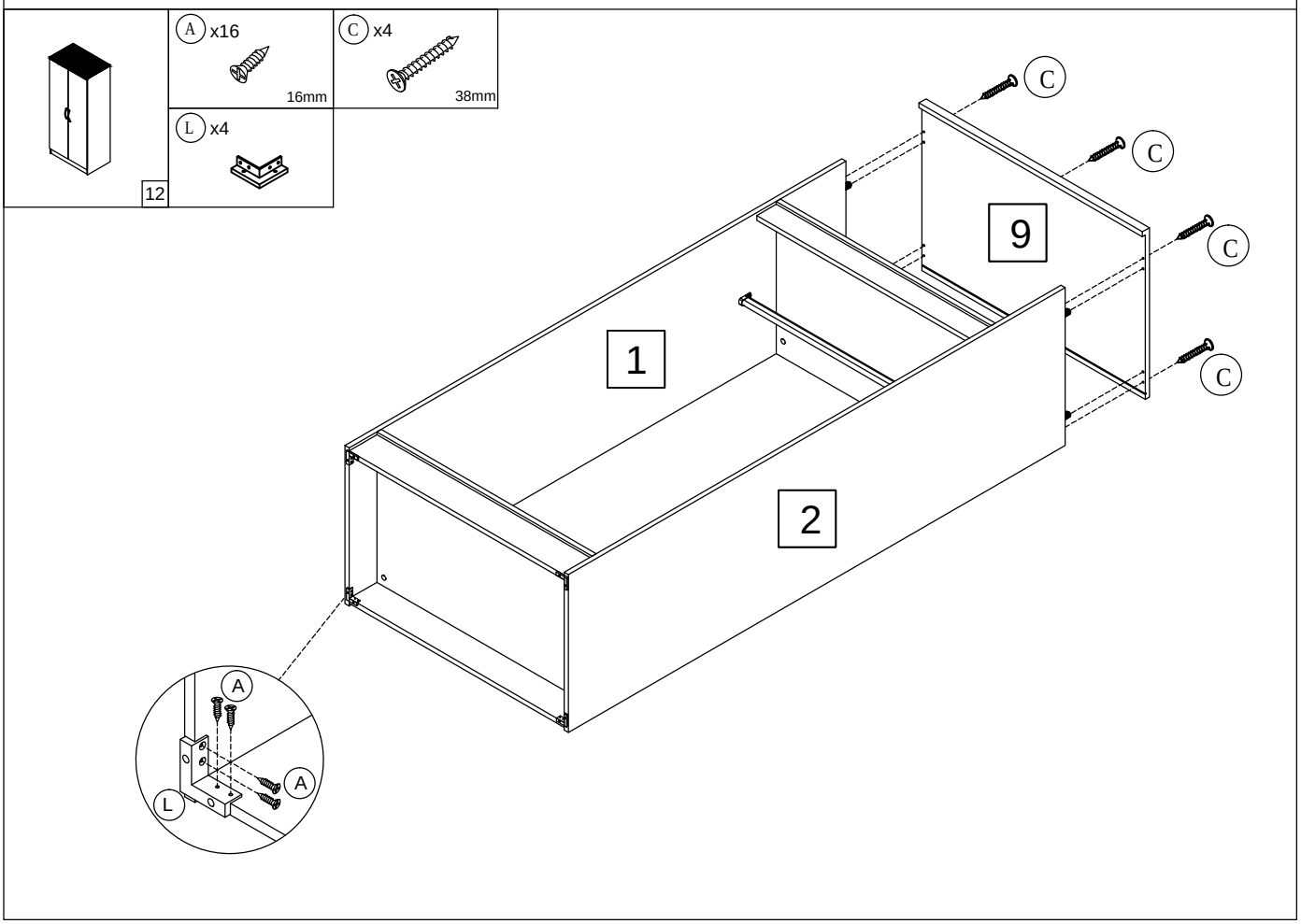
12
A x16
16mm
C x4
38mm
L x4
C
C
C
C
9
1
2
A
A
L