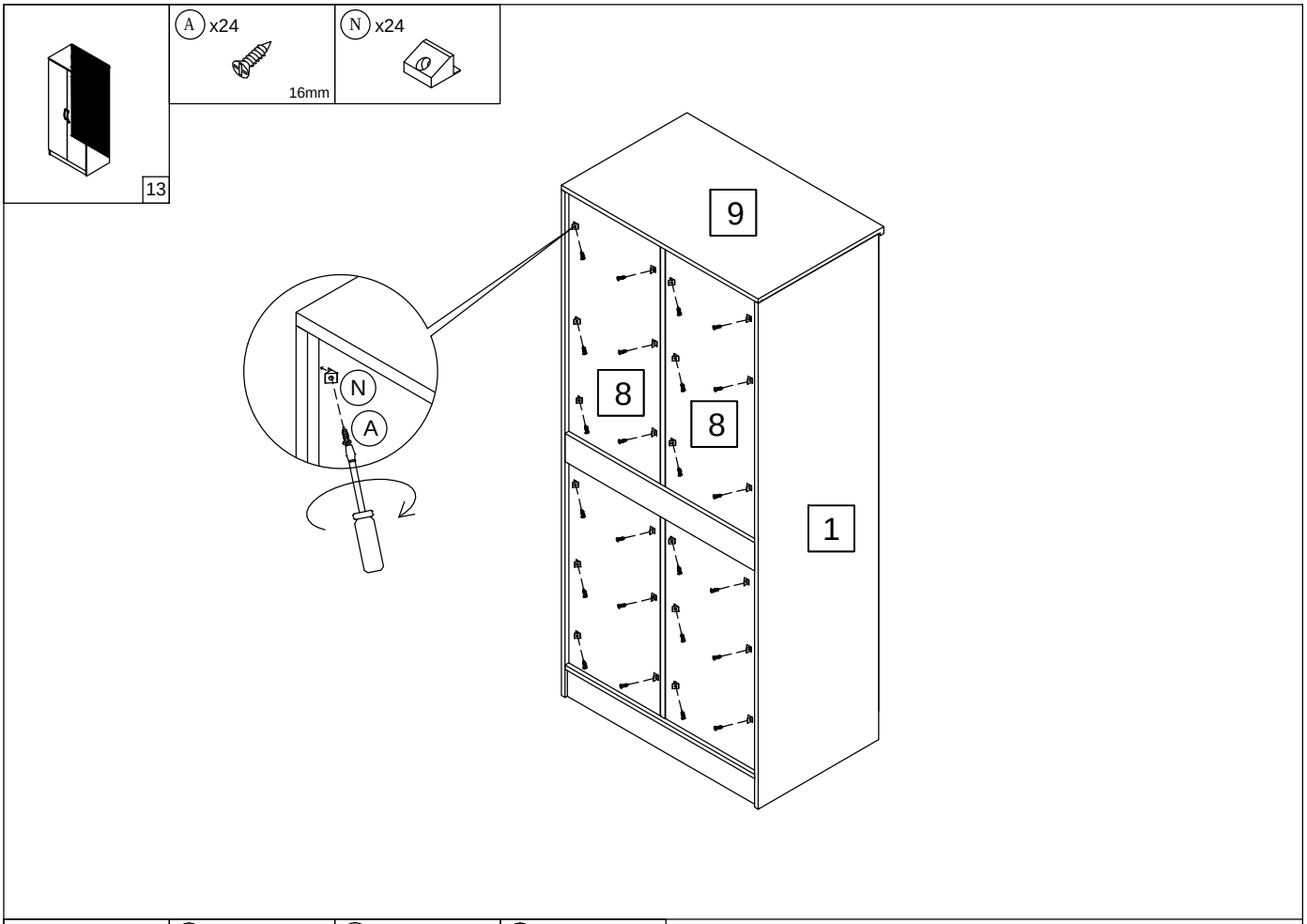
13
A x24
16mm
N x24
9
8
8
1
N
A

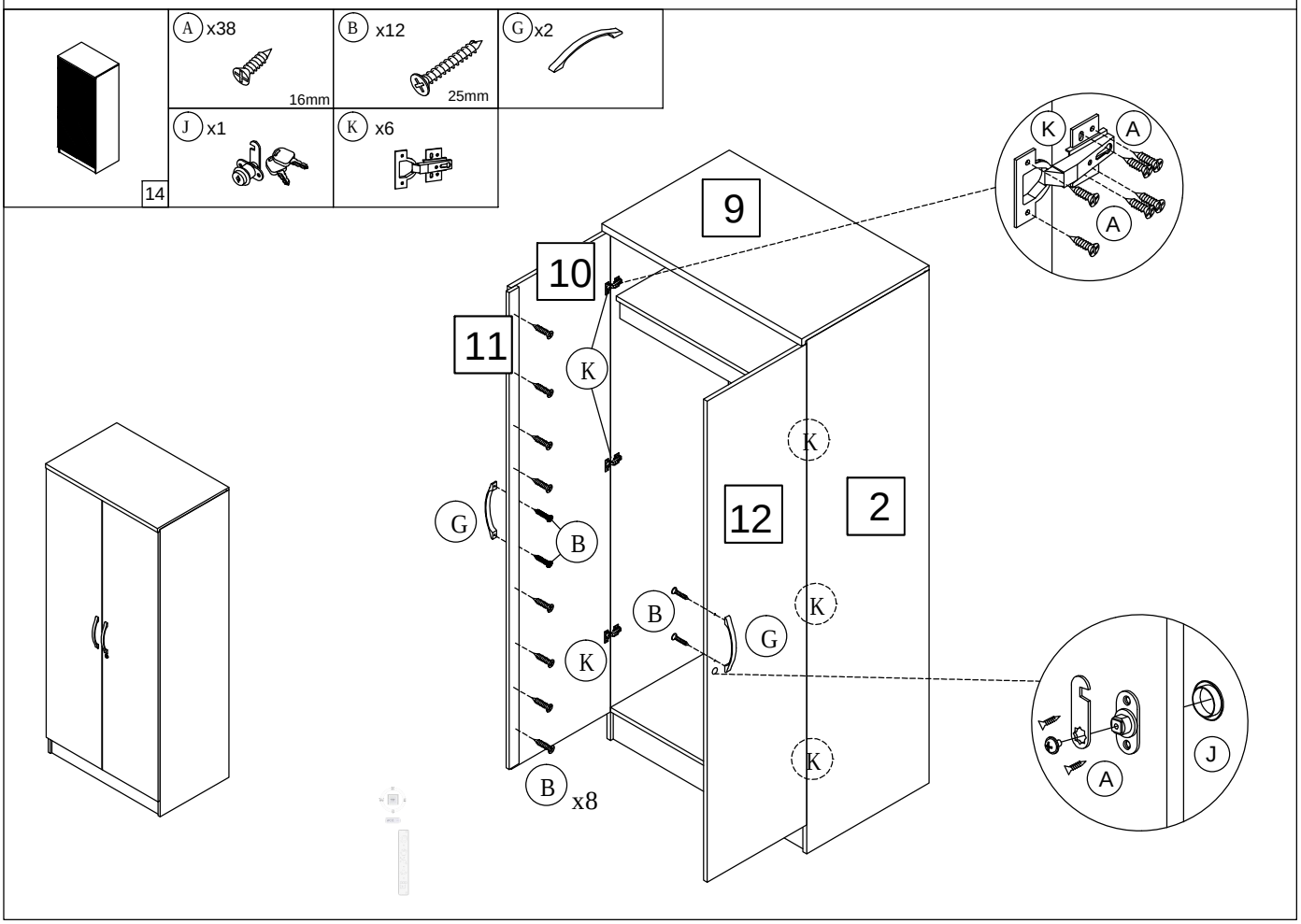
14
A x38
16mm
B x12
25mm
G x2
J x1
K x6
9
10
11
12
2
K
A
A
K
K
K
K
G
B
B
G
K
B x8
A
J